Fiat BR-20/-20M

72 214

1/72 scale detail set for Italeri kit

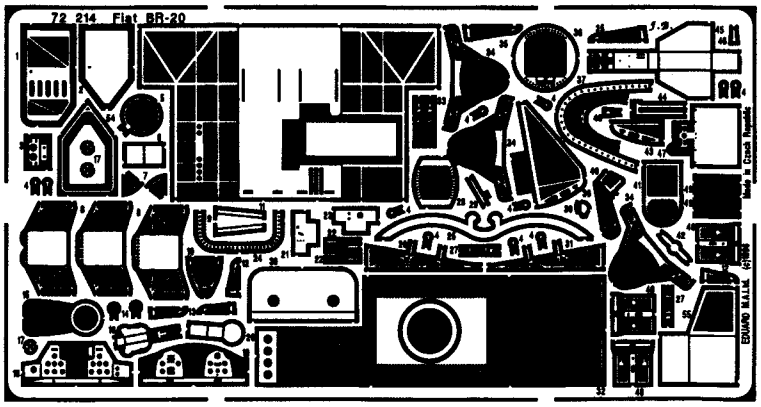

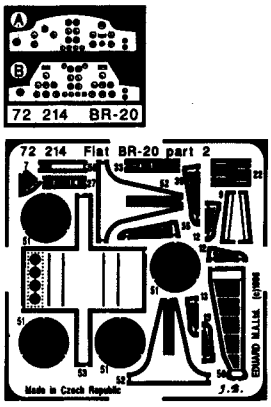

OPPOSITE SIDE
REMOVE
BEND
REPLACE
GRIND

A INTERIOR

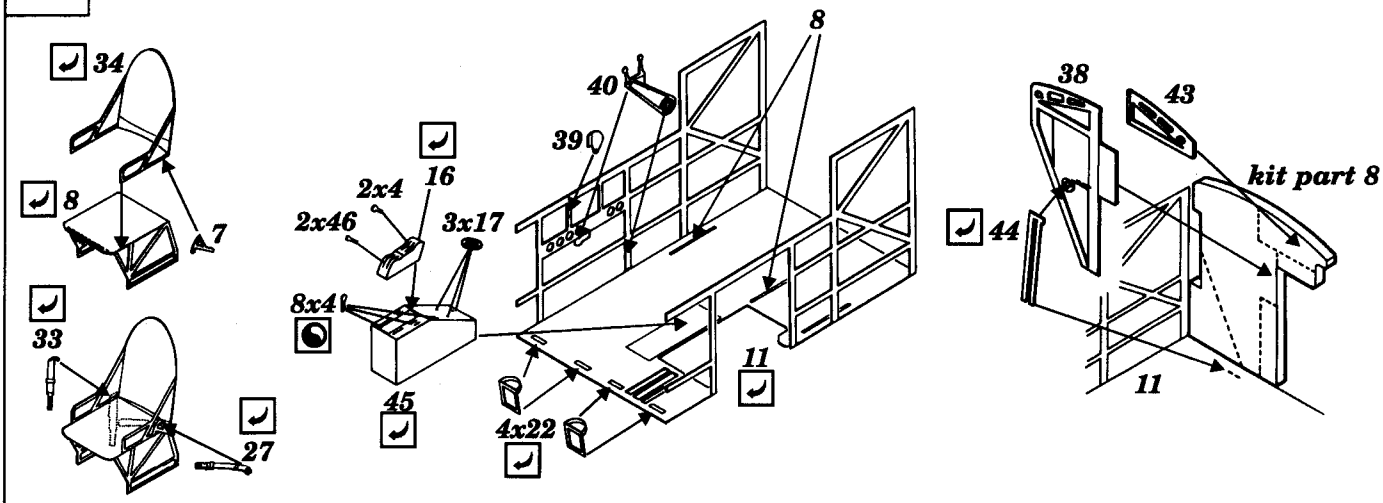

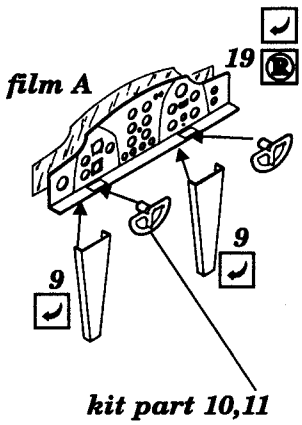

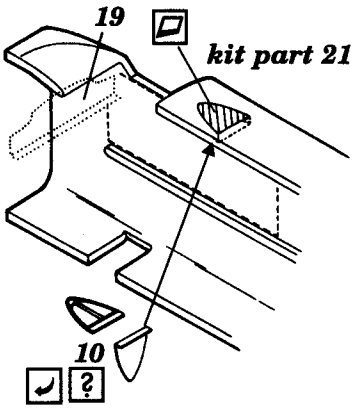

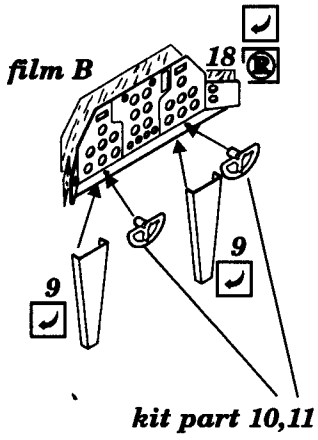

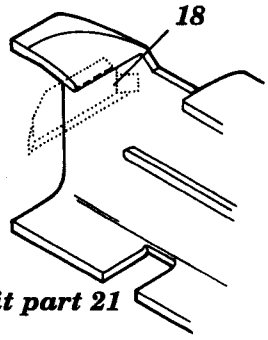

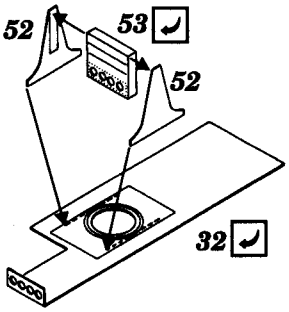

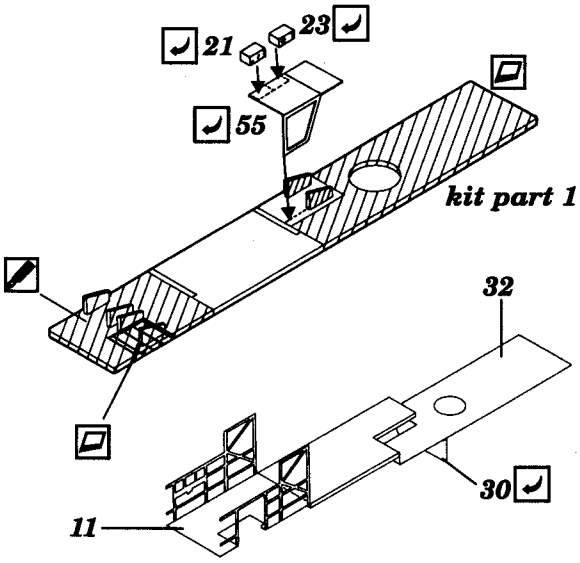

? 18...BR-20M version
19...BR-20 version

B DOORS & GENERATOR

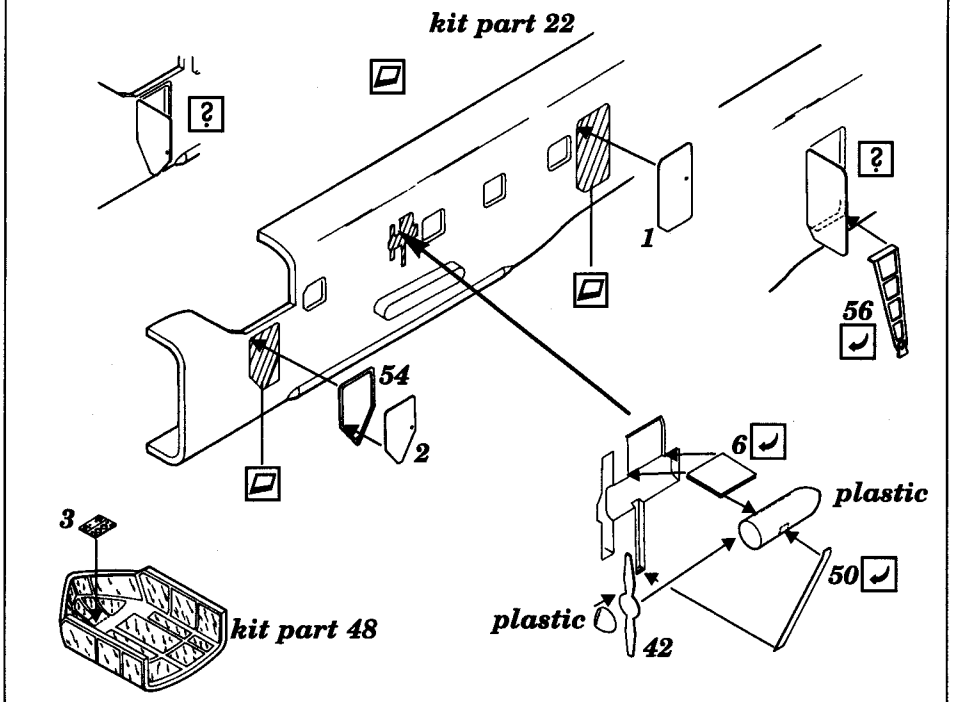

C ‚JAW'

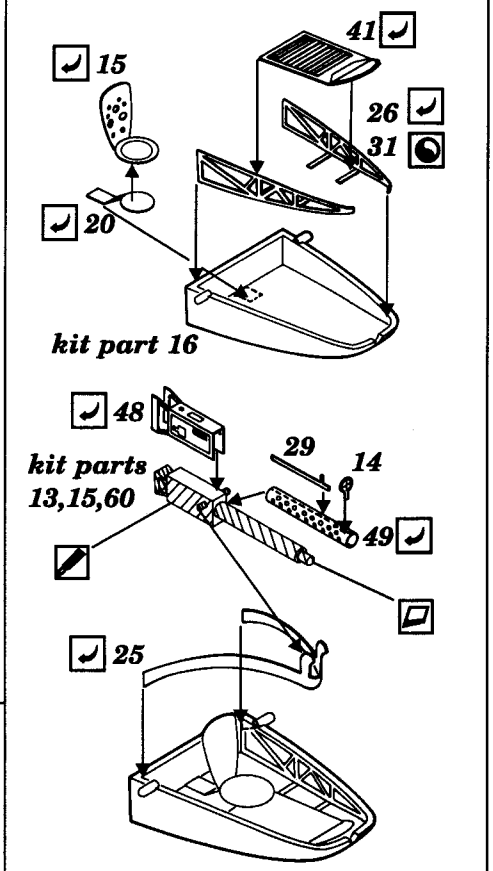

D NOSE TURRETS

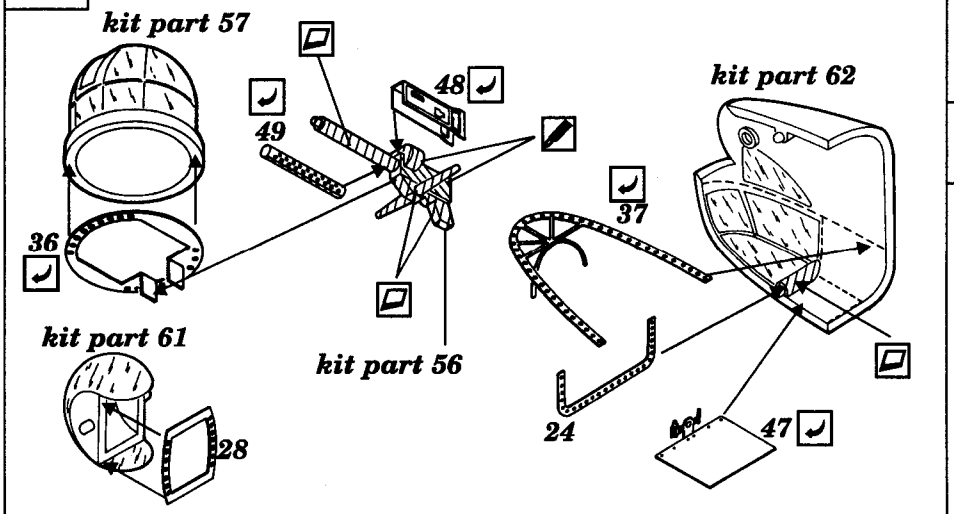

E WHEEL

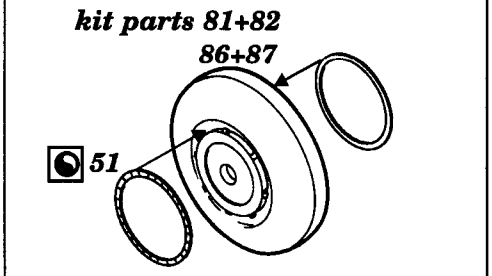

F EXTERNAL PARTS

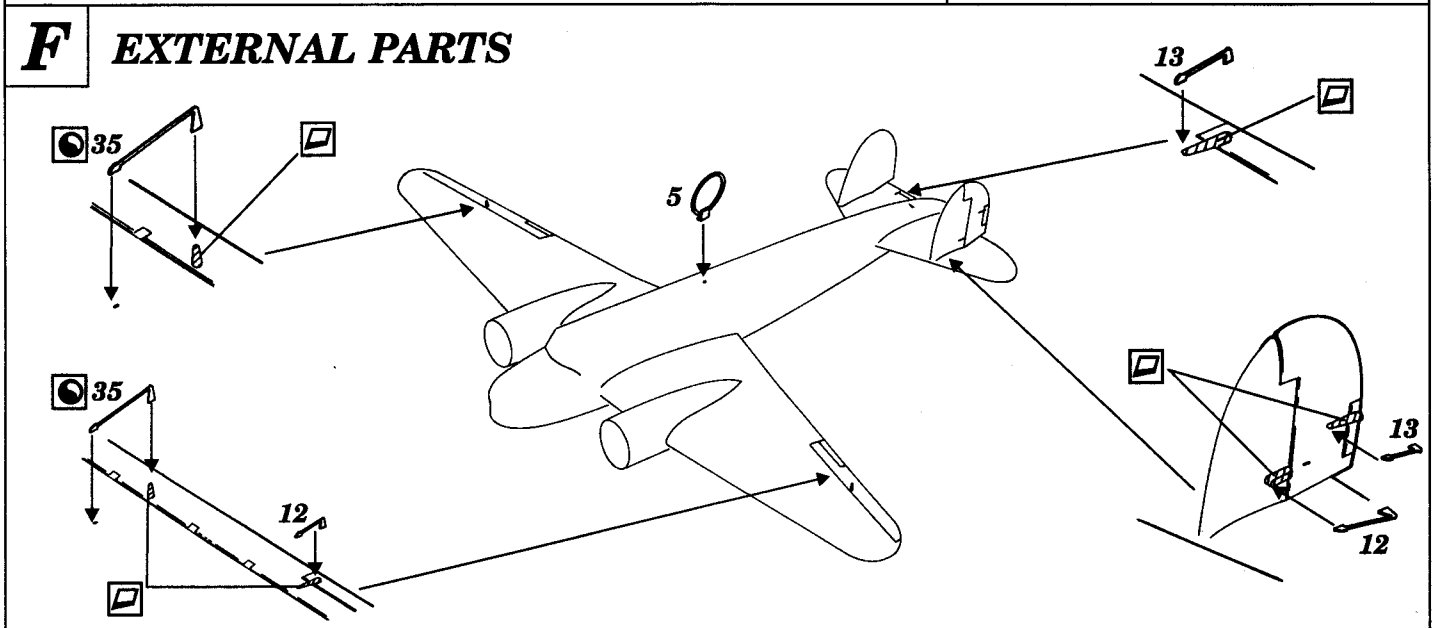

EDUARD Ltd. © 1996